MicroClear®

Technical Data Sheet **FILTER HOUSING MB2-S** Article-No. 80200056

Complete assembled units for biological wastewater treatment with submerged membrane cassettes, including:

- Membrane cassettes MicroClear® MCXL2
- Filter housing made of stainless steel 1.4571
- Membrane tube diffusor for medium bubble aeration in the filtration tank optimized for the plate distance of the MicroClear® filters

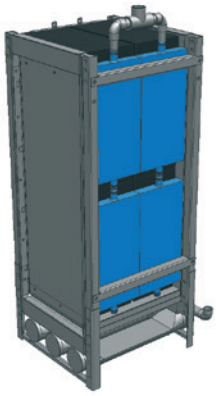

Parameter	Unit	Value
dimension of filter housing (incl. flange for aeration)	L x W x H cm	59.8 x 49.6 x 135.5
air connection	DN/NPS	80/3”
filtrate connection	DN/NPS	40/1½“
total number of MicroClear® MCXL2 cassettes		4
total membrane surface area	m²	32
possible flow[1] 2 chemical cleanings/year 1 chemical cleaning/year	m³/day	 20 10
membrane material[2]		PES/PVDF
pore size nom.[2]	µm	0.04-0.3
filtration pressure	bar	0.1-0.25
backflush pressure	bar	0.1
filter housing material		stainless steel 1.4571
medium bubble aeration membrane		EPDM
total required air flow for scouring	Nm³/h	10-20
weight	kg	approx. 90

[1] depending on wastewater characteristics
[2] membrane material selectable for specified applications or customers

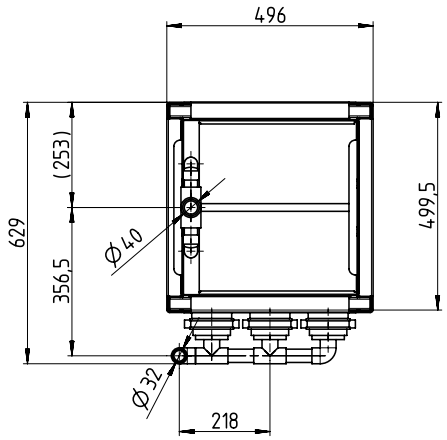

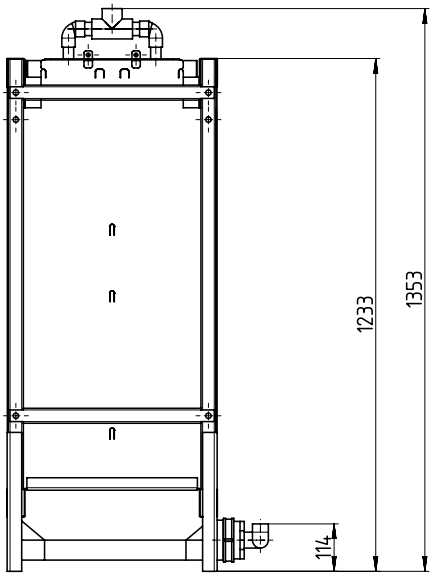

Revised: 13.01.2014
Design and specifications are subject to change without notice.

newterra gmbh
Steinbruchstrasse 8
35428 Langgoens
Germany

Tel +49 (0) 64 47 8 86 05 - 0
Fax +49 (0) 64 47 8 86 05 - 10
E-Mail info@microclear.de
Web www.microclear.de